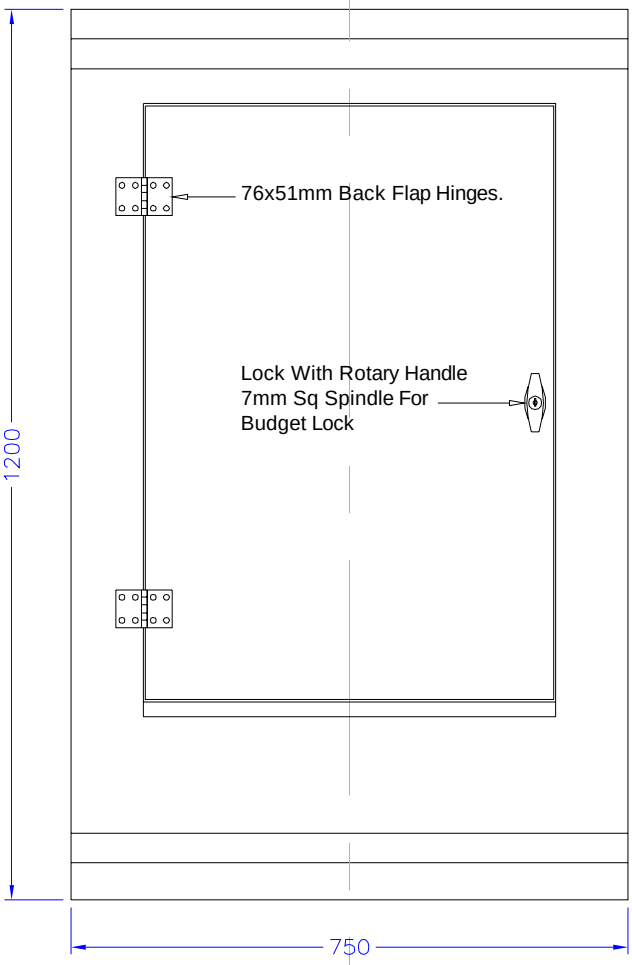


**Front Elevation.**

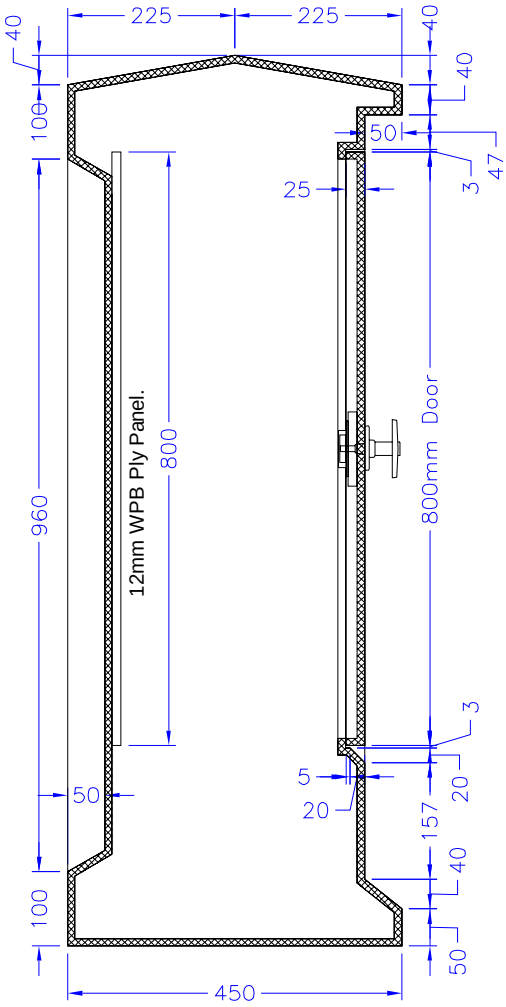


**Section A-A.**

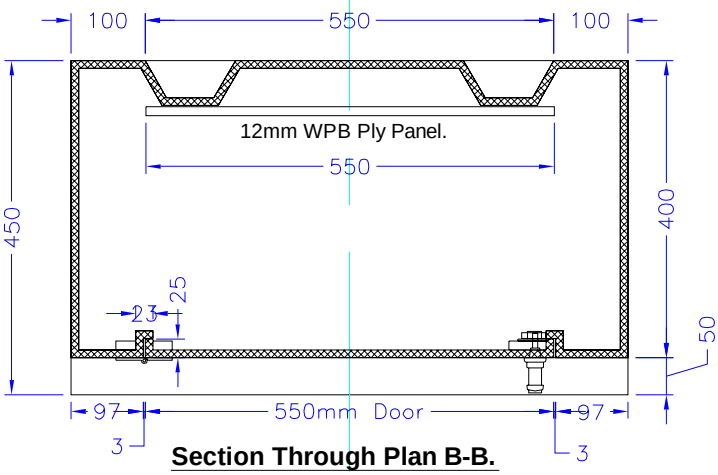


**Section Through Plan B-B.**

| | | |
|---|---|---|
| Scale: 1:10 | Title: Single Door Kiosk | |
| Drawn by: R.G.W. | | |
| Date: 02-2003 | Drawing No: 1028 | Revision: |

© G.H.Bell - Reproduction without consent is prohibited.